COPYRIGHT ALL RIGHTS RESERVED

DO NOT SCALE

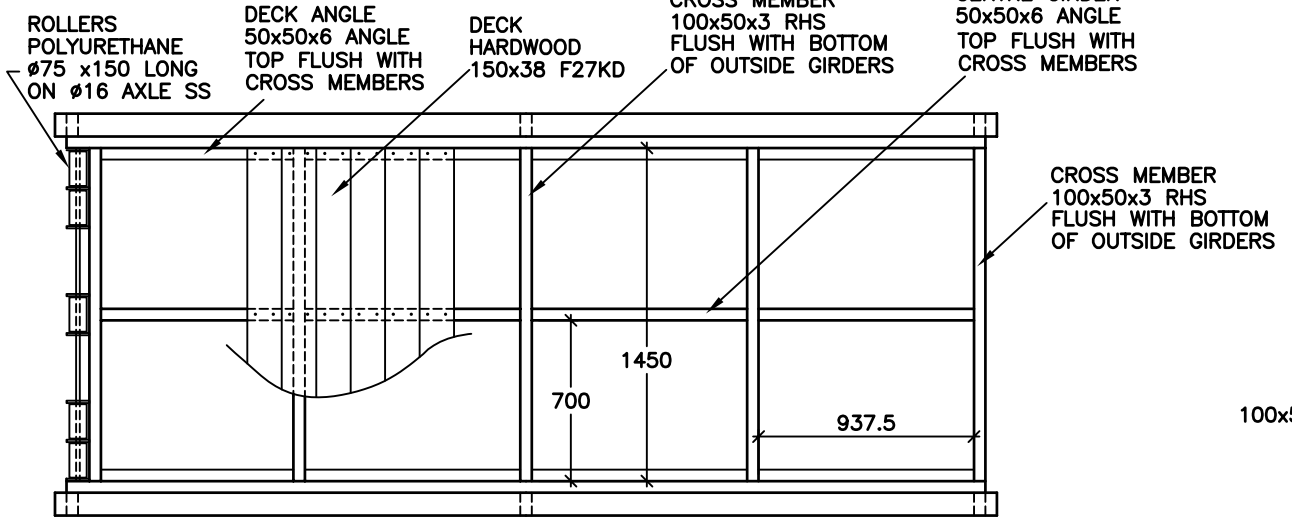

PLAN VIEW

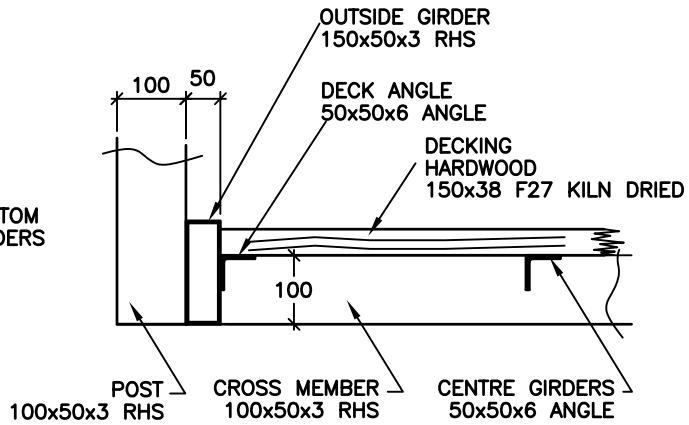

DETAIL SECTION AA

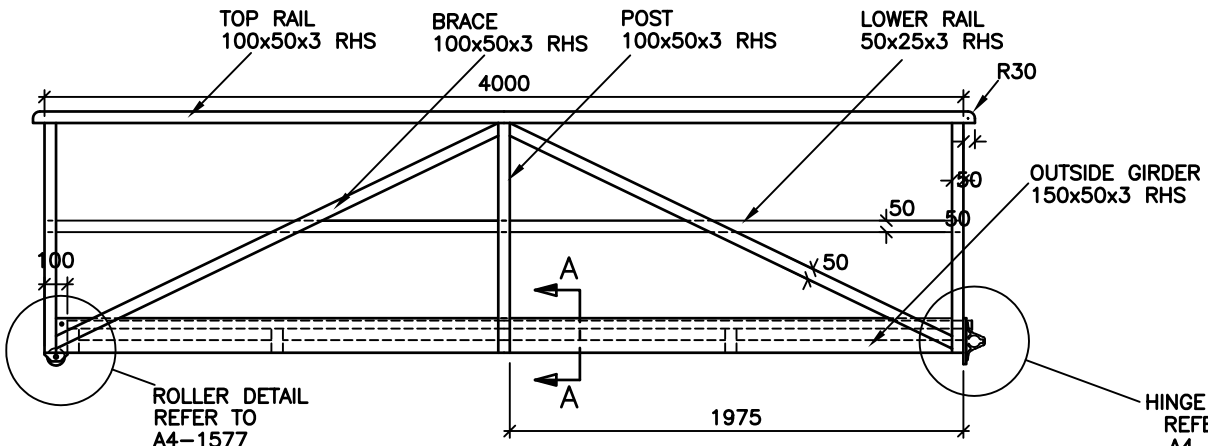

PROFILE VIEW

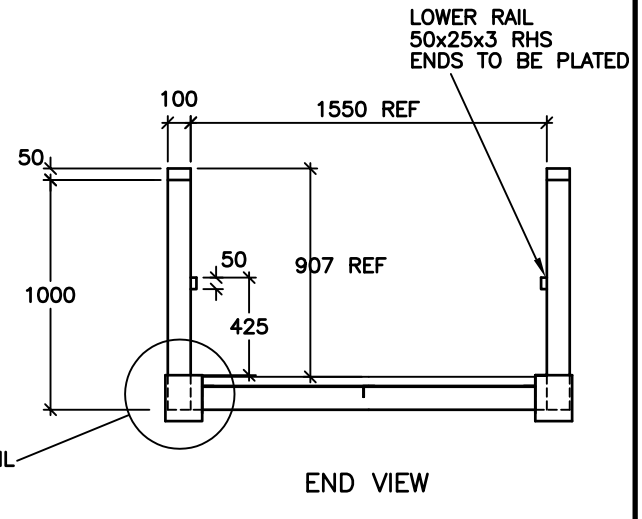

END VIEW

READ IN CONJUNCTION
WITH DRAWINGS, A4–1576
AND A4–1577

APPROX WEIGHT–340kg

NOTE–ALL STRUCTURE IS FULLY WELDED WITH A NOMINAL
FILLET RADIUS OF 5mm.
–ALL EXTRUSIONS ARE OF GRADE 6063–T5 OR EQUIVALENT.
–FILLER ALLOY IS OF GRADE 5356.

MARINE DOCK SYSTEMS PTY LTD	4.0m x 1.5m ALUMINIUM RAMP	RAMP–1575	MARINE DOCK SYSTEMS AUSTRALIA	SCALE	N.T.S.	DRAWING No.
				DRAWN	BJM	**A4–1575**
				DATE	23,6,98	REV B